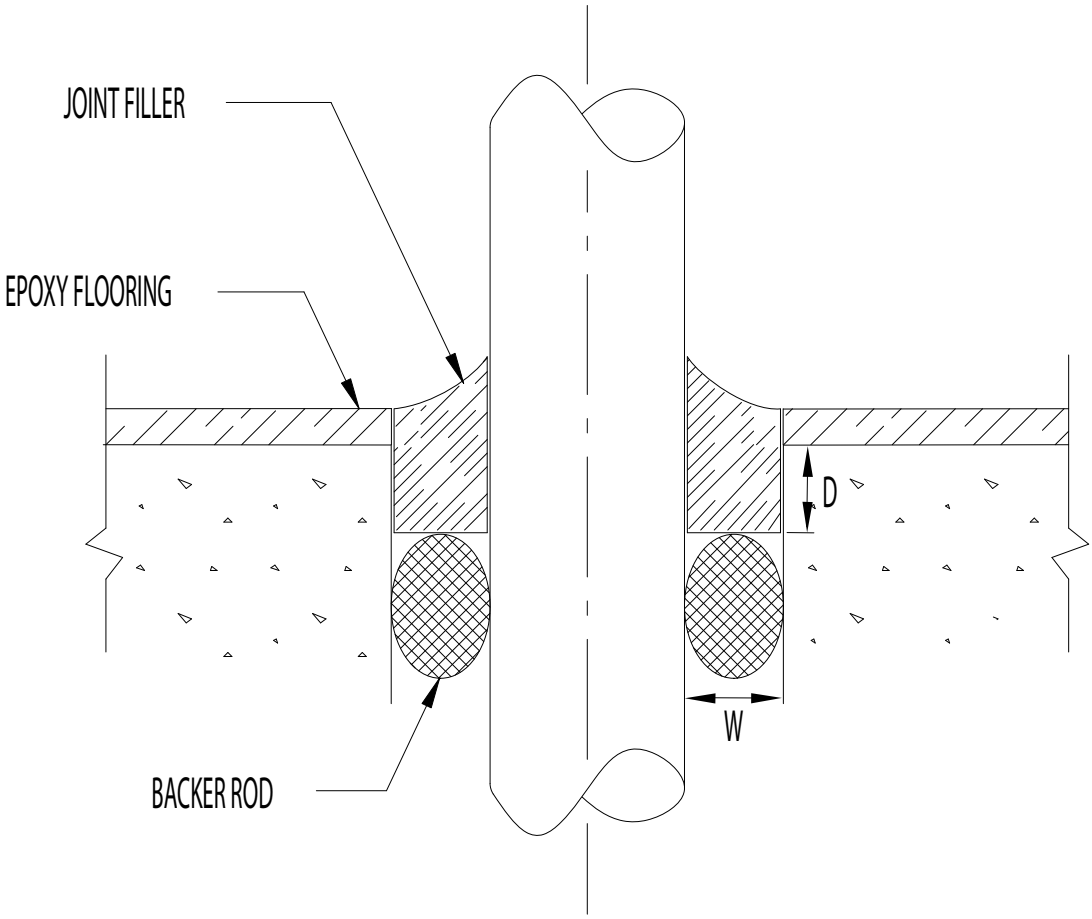

D = W/2

D = DEPTH OF BACKER ROD

W = WIDTH OF JOINT

DUR-A-FLEX®

INNOVATION FROM THE FLOOR UP

www.dur-a-flex.com

860-528-9838

TITLE	EPOXY FLOORING PIPE / DUCT BREACHE DETAIL
DATE 10 / 11	SCALE AS NOTED
DWG NO. EF-14	PROJECT